UNOTECH

A company of the LM-GROUP

Space-saving stockholding

Fast goods turnover

Reasonable-priced transport

RELIABILITY AND QUALITY
FOR MAXIMUM AVAILABILITY

unoTech GmbH
Essener Straße 13
D-49716 Meppen

Tel.: +49 5932 7215 13
Fax: +49 5932 7215 30
Info@unoTech.de
www.unoTech.de

CHANNEL BALING PRESSES SERIES

UPAMAT-H

CHANNEL BALING PRESSES SERIES

UPAMAT-H

UNOTECH
A company of the LM-GROUP

1. POWER PACK

- Hydraulic manifold block in forged construction attached to the oil tank for a minimum of flow losses and highest power efficienty
- Shortest pressing cycle times by significantly reduced down time in the reversal points of the press plate for a smooth operation

2. POWER PACK

- Energy efficient, robust power pack drive with internal gear pumps
- Peak pressure oft he main pumps 400 bar; Operating pressure up to 310 bar
- Low pressure stage of gear pumps dedicated for multiple pressure in reference to the shut-off point. Maximum pressure min. 350 bar

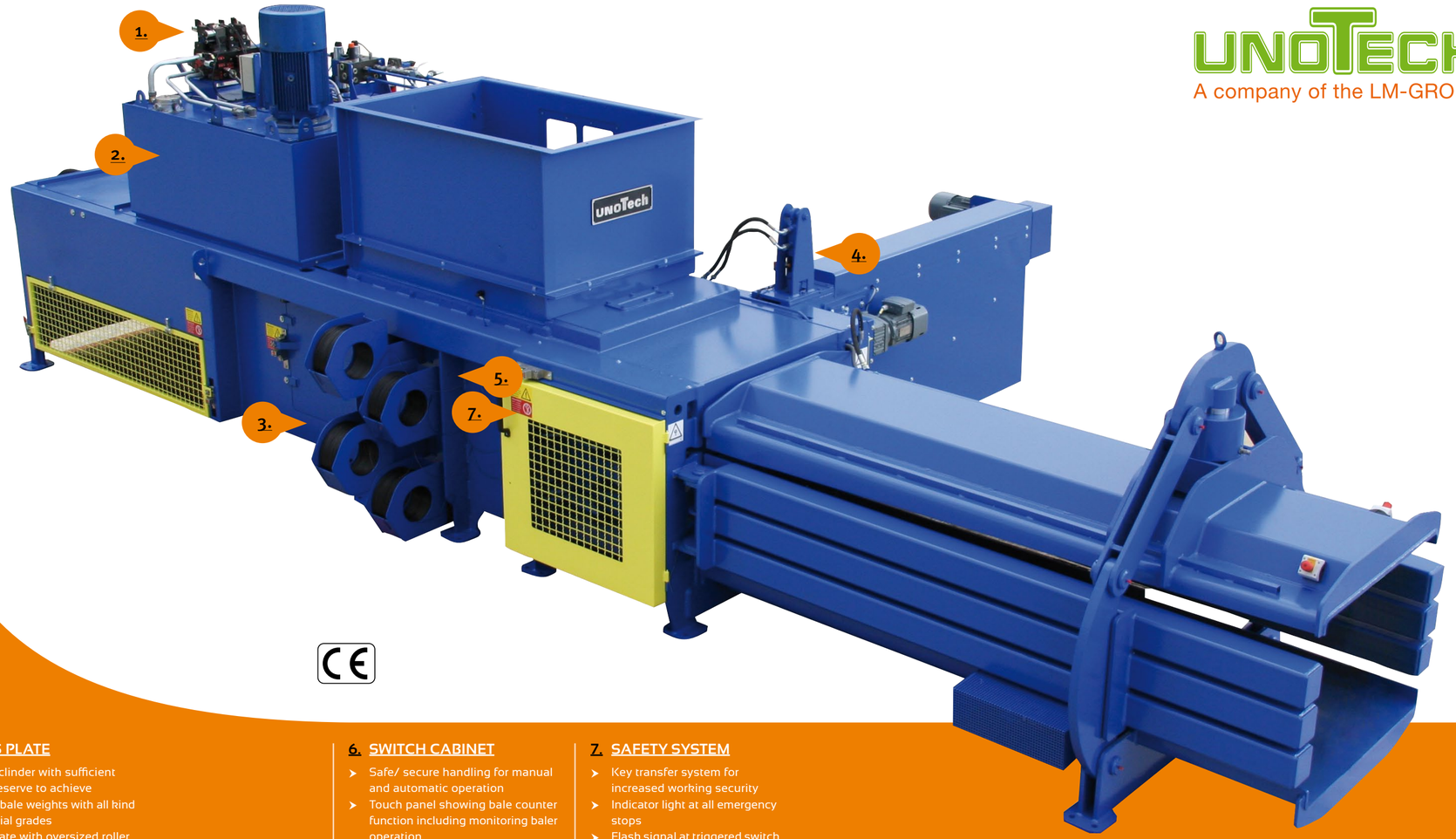

CE

3. PRESS CHANNEL

- Heavely structured press channel with fully machined press floor including wear resistant bolted wear plates
- Compacting tunnel adjustment in static oversized construction

4. TYING SYSTEM

- Fully automatic wire-cutting device
- Suitable for wire thicknesses of 3.1 – 4.1 mm
- New tying system designed to reduce wire consumption
- Replacement of machine spares within shortest terms without any special tools

5. PRESS PLATE

- Main cyclinder with sufficient power reserve to achieve highest bale weights with all kind of material grades
- Press plate with oversized roller and sliding guides

6. SWITCH CABINET

- Safe/ secure handling for manual and automatic operation
- Touch panel showing bale counter function including monitoring baler operation
- Fully enclosed valve connectors with highest type of protection class

7. SAFETY SYSTEM

- Key transfer system for increased working security
- Indicator light at all emergency stops
- Flash signal at triggered switch

APPLICATIONS

- Data shredding
- Department stores
- Central warehouse
- Producer of corrugated cardboards
- Waste paper
- Print shops
- Paper mill
- Manufacturer of cardboards

CHANNEL BALING PRESS

UPAMAT-H

TECHNICAL DATA

YOU GET WITH UNOTECH CHANNEL BALING PRESS COST-EFFECTIVE PRODUCTION OF BALES, DURABLE AND HIGHLY COMPACTED BALES WITH LITERALLY FORM, THE ECONOMIC BASIS FOR SPACE-SAVING STOCK-HOLDING, FAST GOODS TURNOVER AND REASONABLY-PRICED TRANSPORT.

UPAMAT-H	60 H 4	70 H 4	80 H 4	100 H 4
Pressing force	520 kN	600 kN	650 kN	800 kN
Max. cutting force	630 kN	720 kN	800 kN	990 kN
Specific pressing force	84 N/cm²	96 N/cm²	97 N/cm²	120 N/cm²
Feeding chute dimensions	1.250 x 920 mm	1.500 x 920 mm	1600 x 1.020 mm	1.800 x 1.020 mm
Channel dimensions	750 x 1.000 mm	750 x 1.000 mm	750 x 1.100 mm	750 x 1.100 mm
Pump drive performance*	1 x 22 kW - 1 x 30 kW - 1 x 45 kW	1 x 30 kW - 1 x 45 kW - 1 x 75 kW	1 x 30 kW - 1 x 45 kW - 1 x 75 kW	1 x 75 kW - 2 x 45 kW
20-30 kg/m³	3,9 t/h 4,9 t/h 8,1 t/h	5,1 t/h 8,7 t/h 12,3 t/h	4,2 t/h 6,8 t/h 10,0 t/h	7,5 t/h 10,5 t/h
35-50 kg/m³	6,0 t/h 7,6 t/h 12,2 t/h	7,8 t/h 13,2 t/h 18,5 t/h	7,0 t/h 10,5 t/h 15,5 t/h	12,5 t/h 17,5 t/h
60 kg/m³	6,6 t/h 8,4 t/h 14,0 t/h	8,5 t/h 14,5 t/h 20,5 t/h	7,5 t/h 11,5 t/h 18,0 t/h	13,5 t/h 19,0 t/h
100 kg/m³	9,5 t/h 12,0 t/h 20,0 t/h	12,5 t/h 21,0 t/h 30,0 t/h	11,5 t/h 18,0 t/h 26,5 t/h	20,0 t/h 28,0 t/h
Bale weights**	350 - 500 kg	370 - 600 kg	500 - 700 kg	500 - 800 kg
Bale lenghts	up to 1,80 m	up to 1,80 m	up to 2,00 m	up to 2,00 m
Baler weight	approx. 13 t	approx. 14,5 t	approx. 24 t	approx. 28 t

* in terms of bulk weight and drive rating

** dependent on bulk weight and bale lenght

Subject to changes in design and dimensions

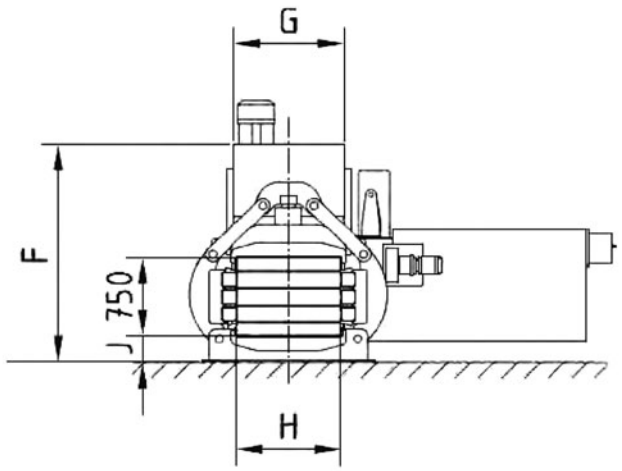

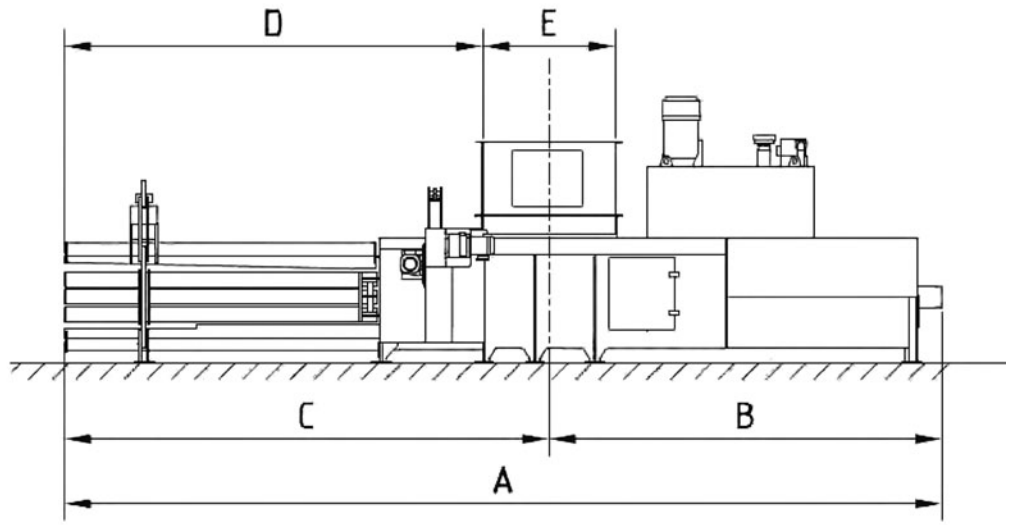

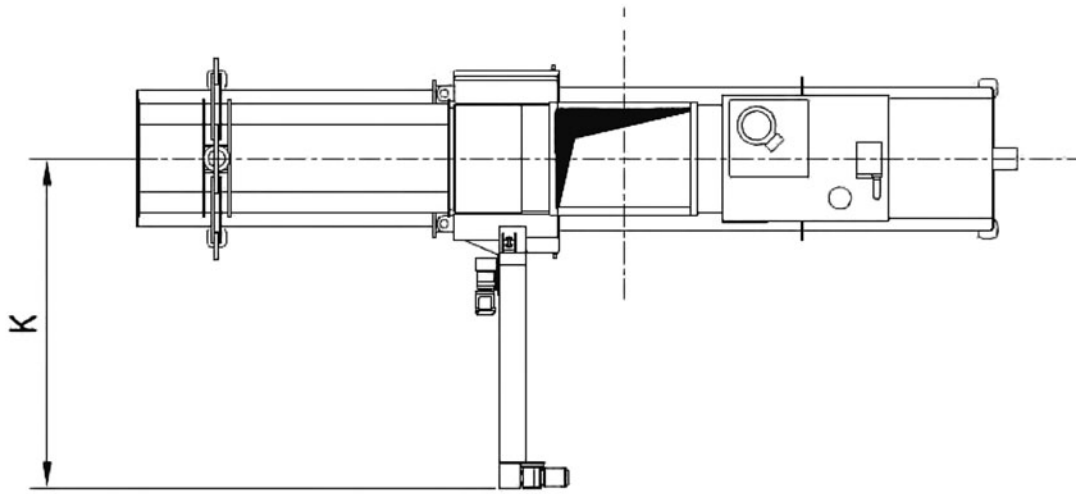

UNOTECH
A company of the LM-GROUP

CE

DIMENSIONS	A	B	C	D	E	F	G	H	J	K
60 H 4	8.287	3.713	4.574	3.949	1.250	2.100	920	1.000	255	3.166
70 H 4	8.787	4.088	4.699	3.949	1.500	2.100	920	1.000	255	3.166
80 H 4	10.745	5.409	5.336	4.536	1.600	2.700	1.020	1.100	385	3.257
100 H 4	11.772	5.836	5.936	5.036	1.800	2.700	1.020	1.100	385	3.257